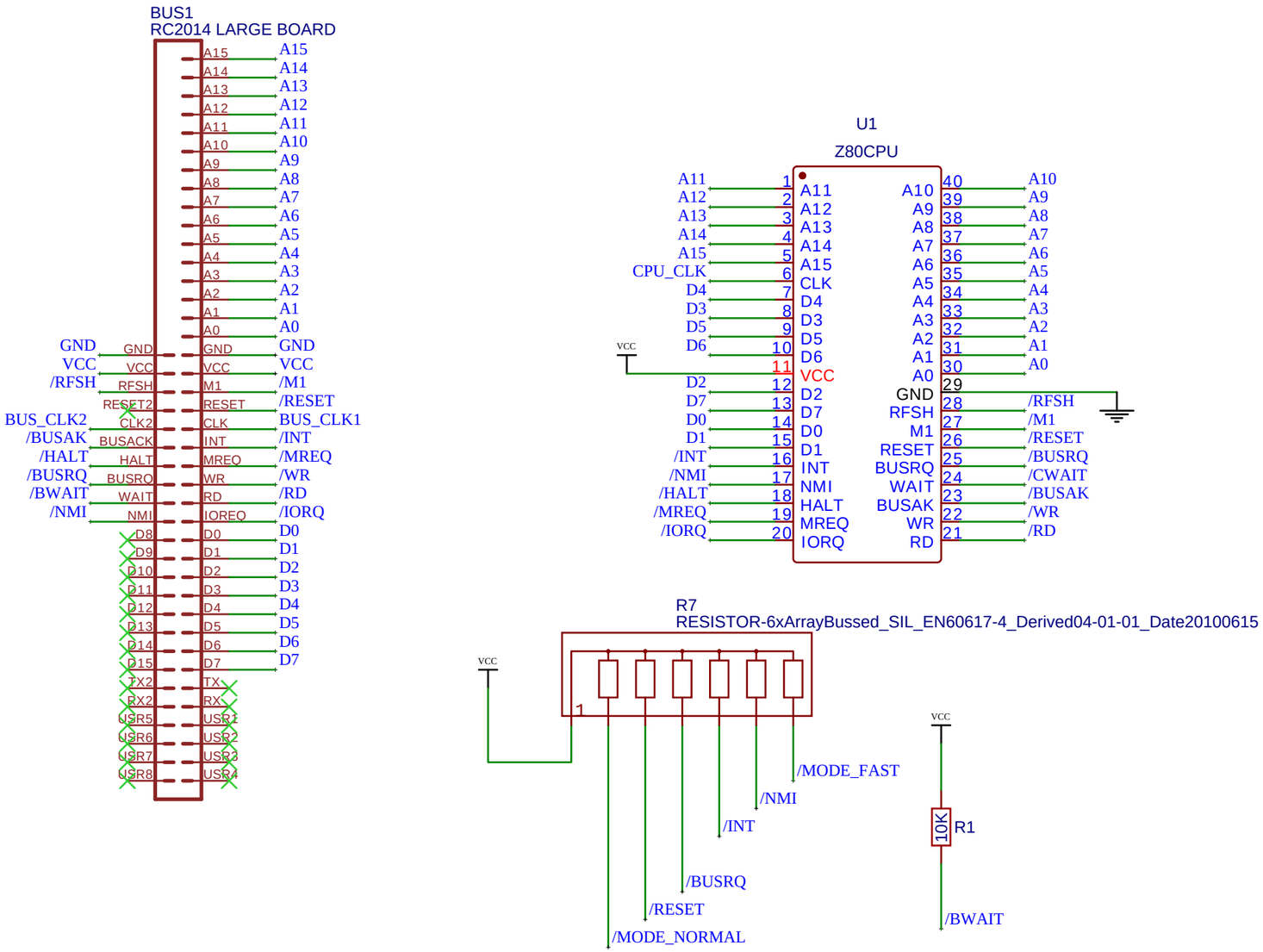

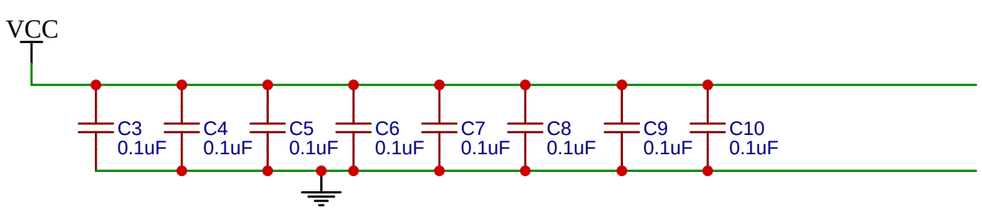

TITLE: RC2014-MSX-CPU		REV: 1.8
EasyEDA	Company: Dino Boards	Sheet: 1/3
	Date:	Drawn By: dean.netherton

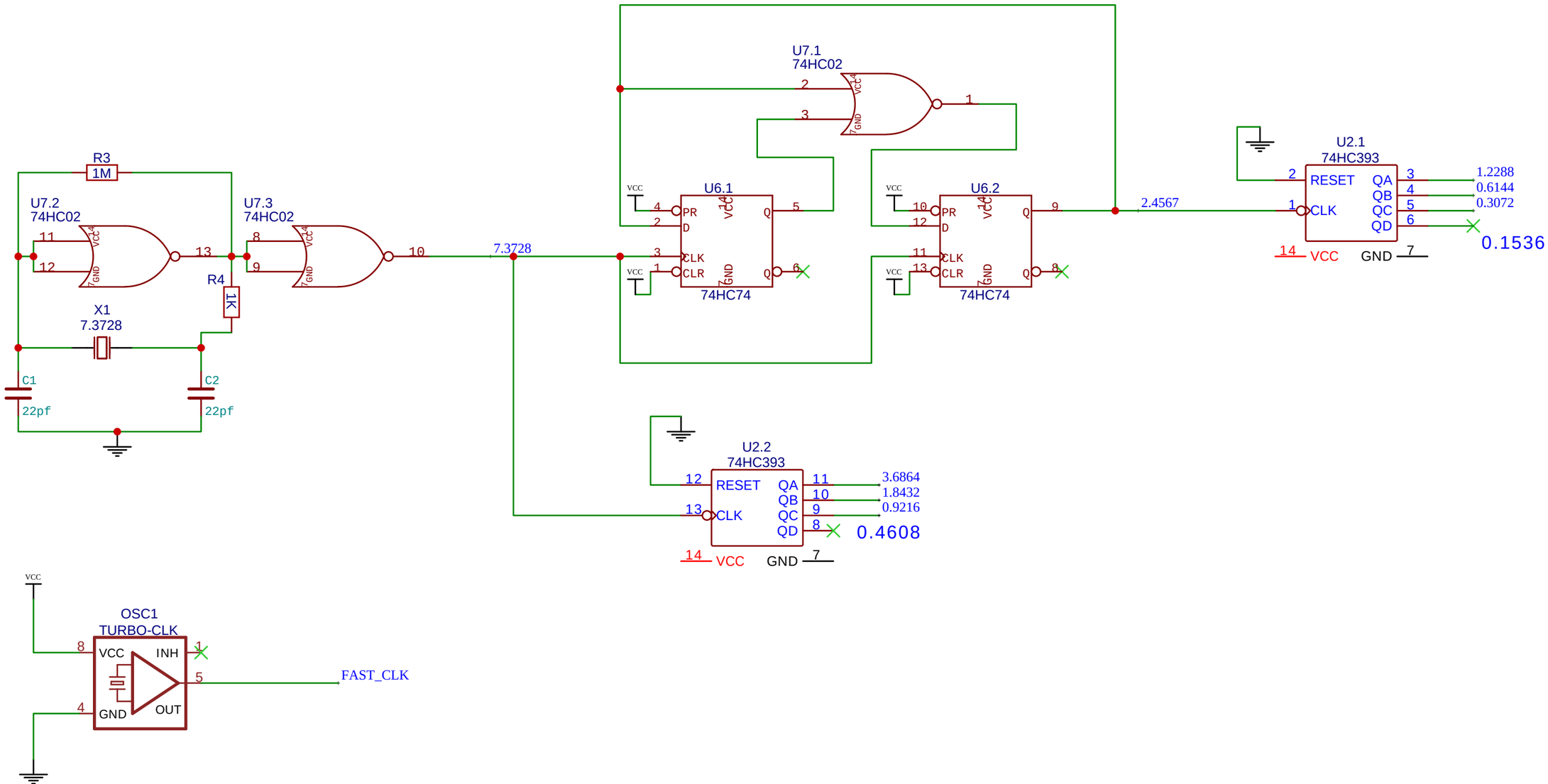

TITLE: RC2014-MSX-CPU-CLKS		REV: 1.8
EasyEDA	Company: Dino Boards	Sheet: 2/3
	Date:	Drawn By: dean.netherton

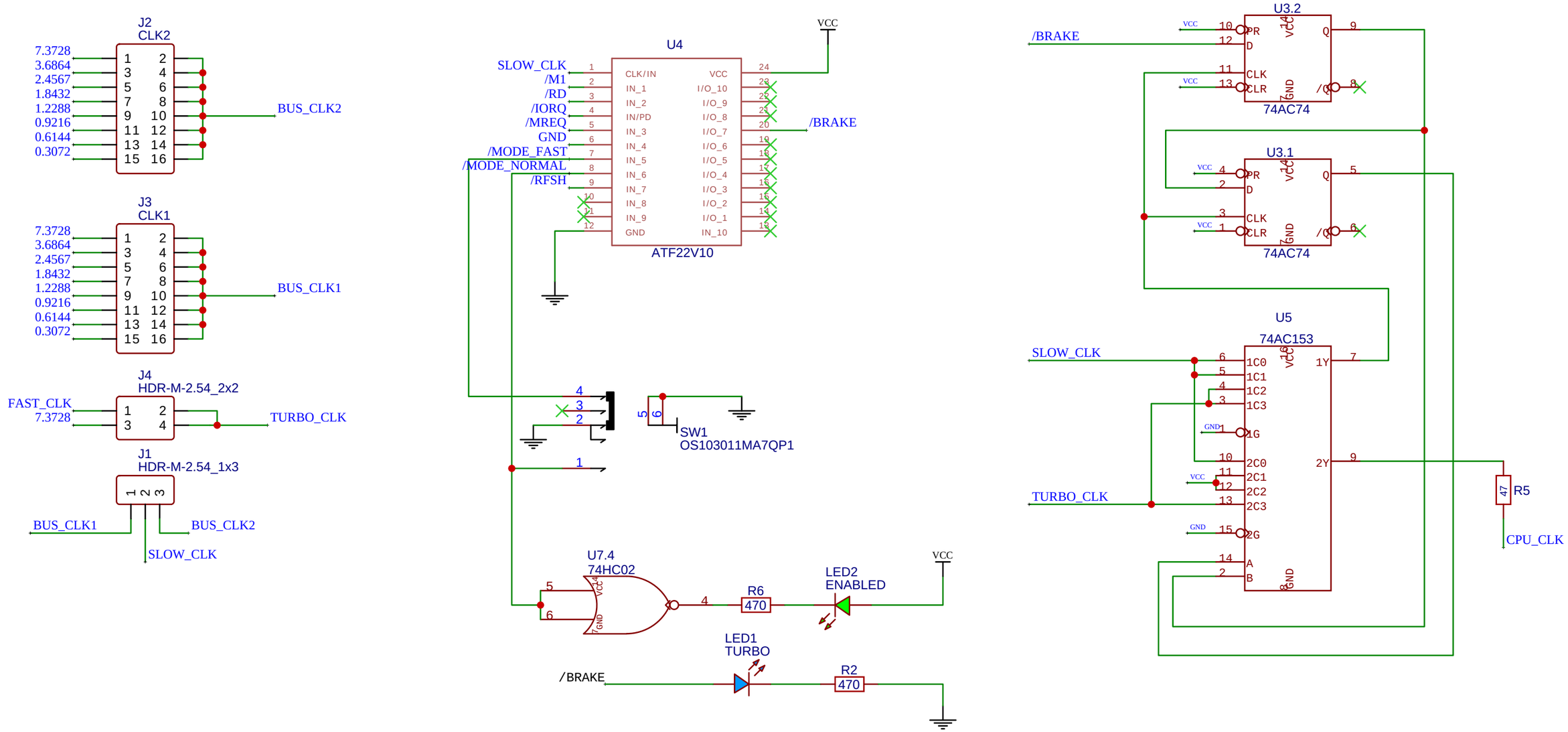

TITLE: RC2014-MSX-CPU-REGS	REV: 1.8
EasyEDA	Company: Dino Boards
	Sheet: 3/3
	Date:
	Drawn By: dean.netherton